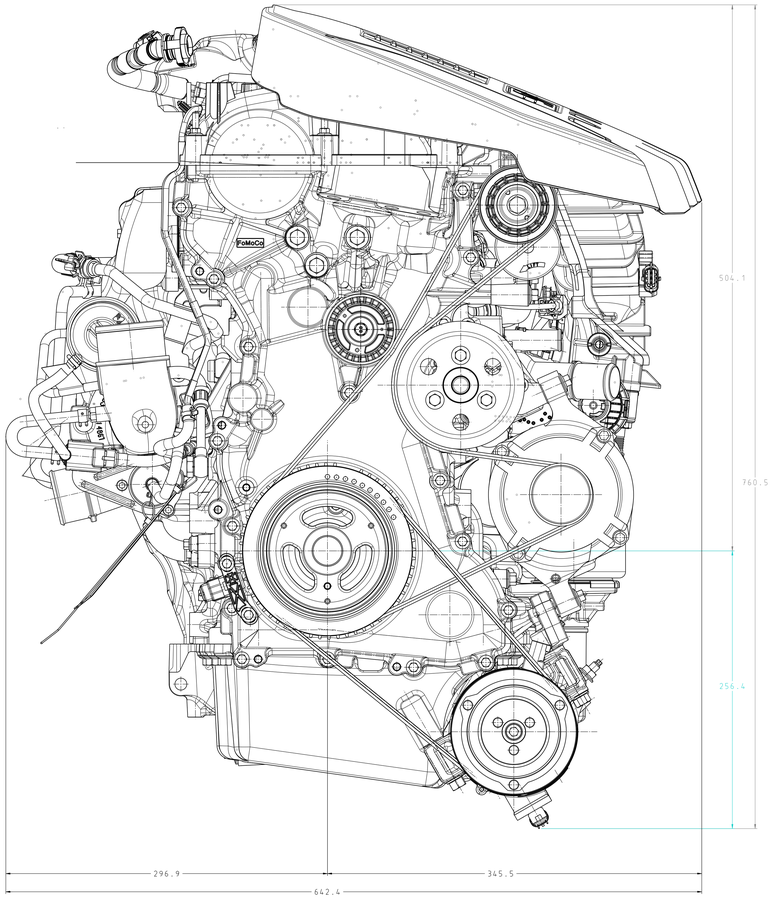

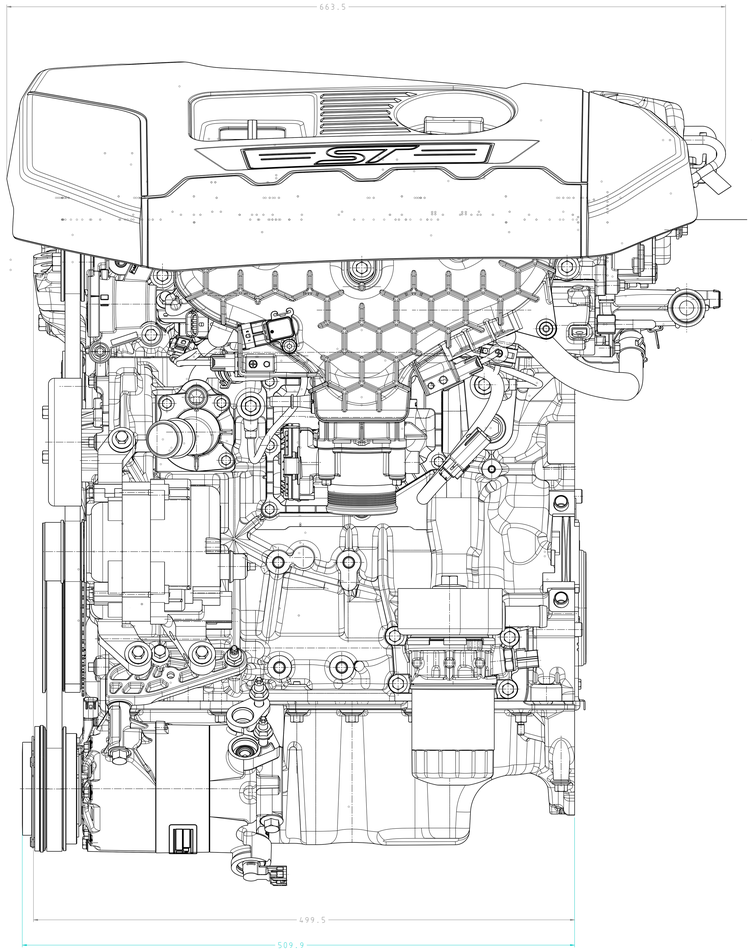

2.0L FOCUS ST PACKAGE